Mariani *- fluid control-* 367

VALVOLA A GLOBO – COPERCHIO BULLONATO – VITE ESTERNA – ASTA SALIENTE – BRONZO – PN 16

GLOBE VALVE - BOLTED BONNET - OUTSIDE SCREW & YOKE - RISING STEM – BRONZE – NAVAL BRONZE – PN 16

CONFORM TO: DIN 86260/86261
ANSI B16.24
LENGTH DIN 3202 F1

OPTIONAL MATERIALS:
1) ASTM B148C95800 (Al/Bz)
2) ASTM A 126B (Cast Iron)
3) ASMT A 395 (Ductile Cast Iron)

OPTIONAL TRIM MATERIALS :
1) ASTM A182 F316 (INOX)
2) MONEL K500
3) ASTM B148 C95800

WORKING PRESSURES
W.O.G. NON SHOCK
≤ DN 125 = 225 p.s.i.
≥ DN 150 = 150 p.s.i.

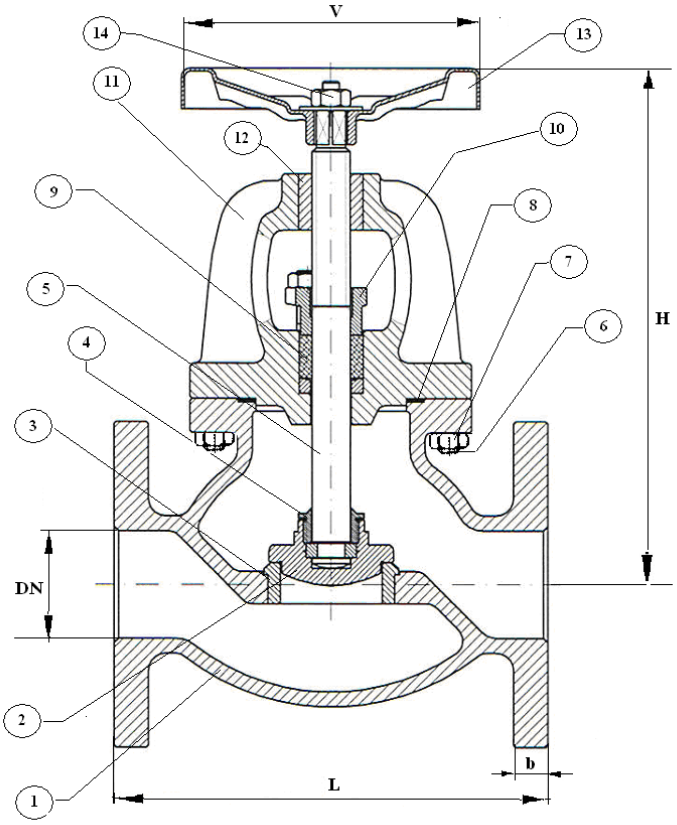

Optional **A**

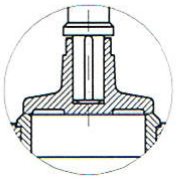

ESEC. AUTOMATICA
EXEC. SDNR

	DESCRIZIONE	DESCRIPTION	BZ (Bronze)	PH/BZ (Phosphor/Bronze)
1	CORPO	BODY	BRONZE ASTM B62 C83600	RG10 / CuSn10Zn
2	OTTURATORE	DISC	BRONZE ASTM B62 C83600	RG10 / CuSn10Zn
3	SEDE	SEAT	BRONZE ASTM B62 C83600	RG10 / CuSn10Zn
4	FERMA ASTA	DISC NUT	BRONZE ASTM B62 C83600	RG10 / CuSn10Zn
5	ASTA	STEM	ASTM B16 C36000	ASTM B150 C63200
6	TIRANTI CORPO	BOLT	ASTM A193 B7 ZINC PL.	ASTM A193 B8 M
7	DADO	NUT	ASTM A194 2H ZINC PL.	ASTM A194 Gr. 8 M
8	GUARNIZIONE	GASKET	GRAPHITE TEFLONED	GRAPHITE TEFLONED
9	BADERNA	STEM PACKING	GRAFOIL	GRAFOIL
10	PREMISTOPPA	THRUST WASHER	BRONZE ASTM B62 C83600	RG10 / CuSn10Zn
11	CAVALLOTTO	YOKE	BRONZE ASTM B62 C83600	RG10 / CuSn10Zn
12	BOCCOLA	YOKE SLEEVE	BRONZE ASTM B62 C83600	BRONZE ASTM B62 C83600
13	VOLANTINO	HANDWHEEL	CARBON STEEL	CARBON STEEL
14	DADO	NUT	ASTM A194 2H ZINC PL.	ASTM A194 Gr. 8 M

FLANGED ENDS: DIN EN 1092-1 PN 6-10-16 or ANSI B16.5 – 150 FF

SIZE	1/2''	3/4"	1"	1''1/4	1 1/2"	2"	2 1/2"	3"	4"	5"	6''	8''	10''	12''	14''
DN	15	20	25	32	40	50	65	80	100	125	150	200	250	300	350
L	135	150	160	180	200	230	290	310	350	400	480	600	730	850	980
H (OPEN)	225	225	245	265	275	305	365	375	425	485	530	665	700	800	920
b	12	14	14	16	16	18	18	20	22	24	24	26	32	32	36
V															
Kg															