490

ATTACCO RAPIDO MASCHIO IN OTTONE - PN 6

QUICK COUPLING MALE THREADED - BRASS - 50 LBS

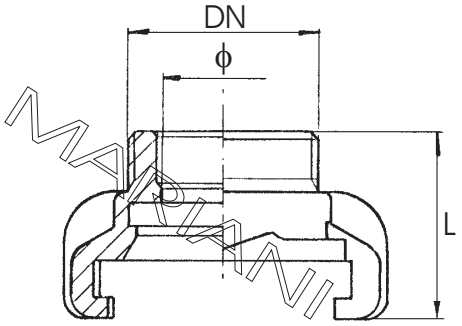

495

ATTACCO RAPIDO FEMMINA IN OTTONE - PN 6

QUICK COUPLING FEMALE THREADED - BRASS - 50 LBS

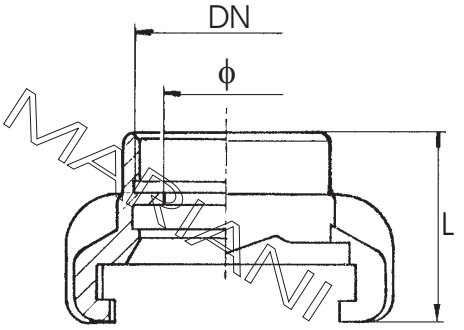

WORKING PRESSURES
W.O.G. NON SHOCK
85 p.s.i.

500

ATTACCO RAPIDO C/PORTAGOMMA IN OTTONE - PN 6

QUICK HOSE CONNECTION - BRASS - 50 LBS

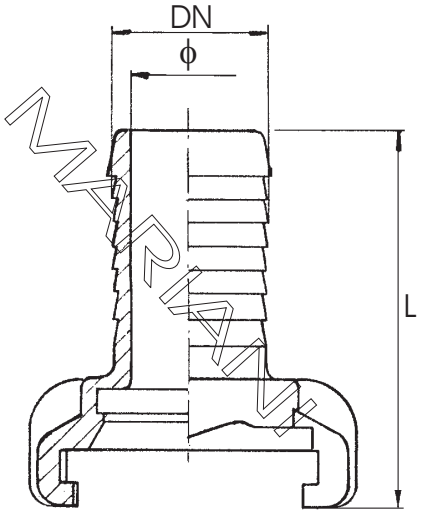

ATTACCO STANDARD PER ART.490-495-500

STANDARD FOR ART.490-495-500

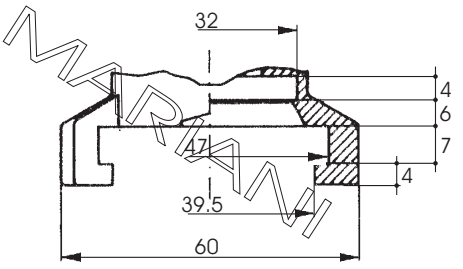

BODY: BRASS ASTM B283
GASKET: NBR-RUBBER

THREADING: GAS (ISO 7/1 Rp)

CONFORM TO: USED ONLY FOR WATER

	490-495						500								
DN	**3/8”**	**1/2”**	**3/4”**	**1”**	**11/4”**	**11/2”**	**12**	**15**	**18**	**22**	**25**	**27**	**30**	**34**	**42**
ϕ	9	14	19	22	24	24	8	10	13	15	20	21	24	27	34
L	**33**	33	34	34	40	40	51	54	55	60	65	66	68	74	80
Kg	0.08	0.08	0.08	0.08	0.08	0.08	0.10	0.10	0.10	0.10	0.10	0.10	0.10	0.10	0.10